# HSF

IDC HOUSING MATERIAL
Insulation Material:PBT+30%GF(UL94V-0)
Contact Material:Phosphor Bronze
Contact plating:Au or Sn Over Ni

SPECIFICATIONS
Insulation Resistance:5MΩ Min
Contact Resistance:1.0Ω Max
Withstand Voltage:DC 300V, 10S
The Cable Assembly Must 100% Test

CABLE MATERIAL
Insulation:UL 2678,Grey Red Side
Conductor:30AWG(7/0.102mm)
Electrical:300V

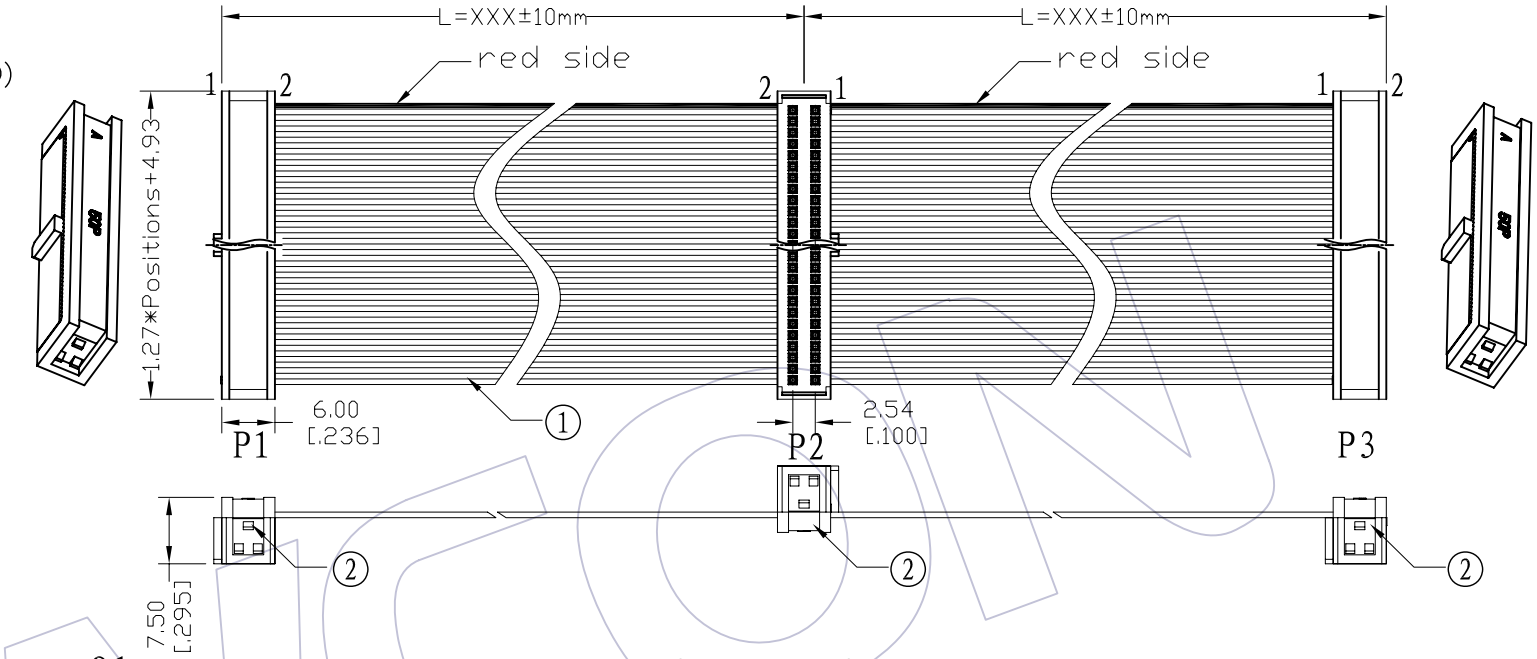


## Ordering Information

FA43 - xx xx E A B xxx - 01

- No.OF Pins: 06~100p
- Contact Plating:
  - G0=Gold Flash
  - G3=10u"Gold
  - G4=15u"Gold
  - G5=30u"Gold
  - S0=Gold Flash/Ni
  - S3=10u"Gold/Ni
  - S4=15u"Gold/Ni
  - S5=30u"Gold/Ni
  - SN=Tin
- Connector Direction: E=Middle Opposite
- Connector Color: B=Black
- Length of Line(mm)

CONNECT METHOD

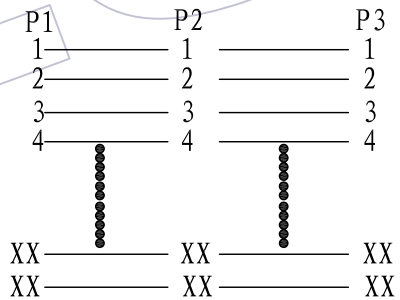


| NO. | PART NO. | NAME | TITLE | QT'Y | UNIT |
|---|---|---|---|---|---|
| ② | 5242-XXYPXXBW01 | CONN. | 1.27*2.54 IDC **P PBT Black With Bump Phosphor Bronze Plating Xu" gold | 3 | SET |
| ① | F3U-A30GXXD0-XXXX-1 | WIRE | UL2678 PH0.635mm XXP 30AWG(7/0.102TC) PVC Grey Marking Red Side | XXXX | MM |

| REV | DATE | MODIFICATION DESCRIPTION | CHANGE | APPROVE |
|---|---|---|---|---|
| A0 | 09/08/20 | NEW | | |

| OPERATION | | | | |
|---|---|---|---|---|
| X.X | ±0.40 | DRAW | BEN | 09/08/20 |
| X.XX | ±0.25 | DESIGN | | |
| X.XXX | ±0.15 | CHECK | | |
| Angle | ± 3° | APPROVE | | |
| DIM | TOL | | | |

| | |
|---|---|
| SCALE | 1:1 |
| UNIT | mm |
| SIZE | A4 |
| SHEET | 1/1 |
| PROJ. | |

WCON 维峰五金电子有限公司
WAFE HARDWARE ELECTRONICS CO.LTD

| | |
|---|---|
| PART NO. | FA43 - xxxxEABxxx - 01 |
| TITLE: | 1.27*2.54 IDC Drawing |
| Customer NO. | |