HSF

NOTES:
Current Rating:3AMP
Contact Resistance:20mΩ max
Withstand Voltage:1000V AC
Insulation Resistance:1000MΩ min
Operation Temperature:-40℃ to +105℃

Contact Material:Brass
Contact plating:Au or Sn Over Ni
Insulator Material:PA9T+33%G.F(UL94V-0)

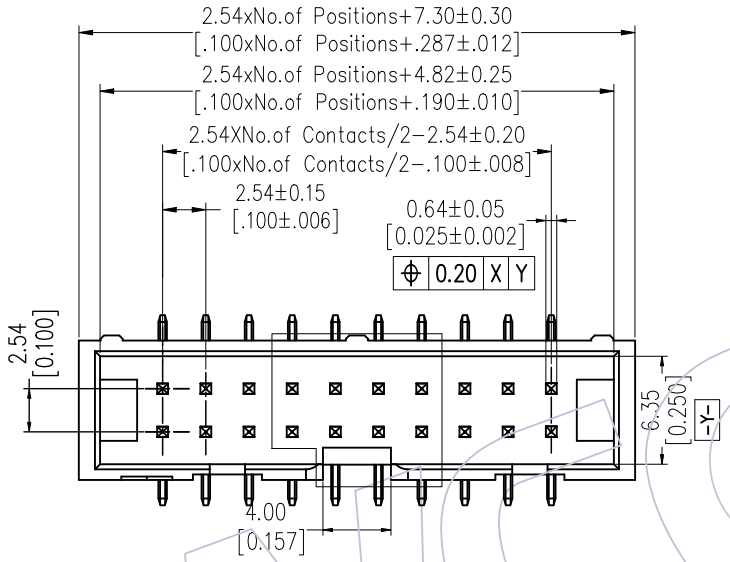

Recommended P.C.B Layout(Top Side)
(PCB BOARD TOLERANCE±0.05)

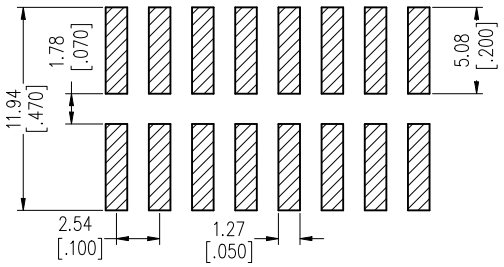

SCALE 1:3

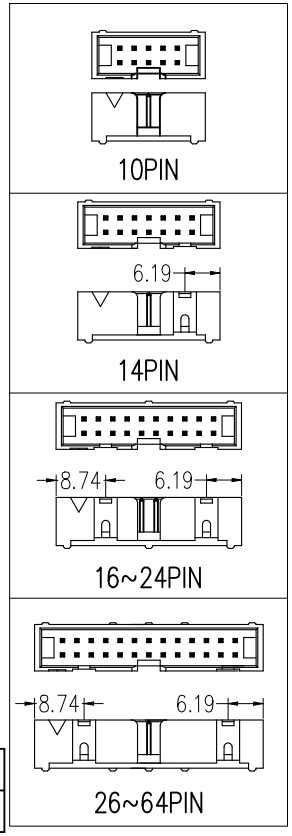

Ordering Information

3113-XX M XX B K00 X 1

No.of Pins	Contact Plating	Color Insulator	Packing:
10P 30P	S0=Gold Flash/Tin	B=Black	T=Tube
14P 34P	S3=10u"Gold/Tin		P=Tube+CAP
16P 40P	S4=15u"Gold/Tin		R=Reel+CAP
20P 50P	S5=30u"Gold/Tin		
24P 60P	SN=Tin		
26P 64P			

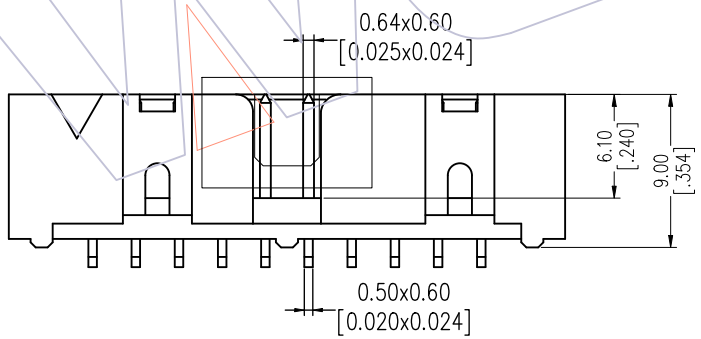

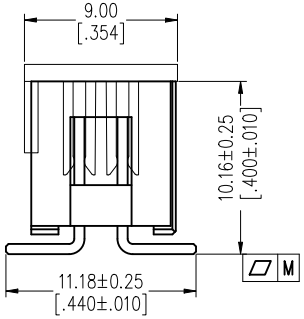

PINS	6-30P	32-64P
M	0.10	0.20

REV	DATE	MODIFICATION DESCRIPTION	CHANGE
A0	2023/05/26	NEW	

OPERATION	
X.X	±0.40
X.XX	±0.25
X.XXX	±0.15
Angle	± 3°
DIM	TOL

DRAW	Tang	DATE	2023/05/26
CHECK		DATE	
APPROVE		DATE	

SCALE	FIT
UNIT	mm
SIZE	A4
SHEET	1/1
PROJ.	

PART NO. 3113-XXMXXBK00X1

TITLE: 2.54 Box Header SMT H=9.0

Customer NO.

WCON
Http: www.wcon.com

WCON-Dongguan
Tel: +86 769 85358920
Fax: +86 769 85358915
E-mail: sales@wcon.com

WCON-Kunshan
Tel: +86 512 57468408
Fax: +86 512 57468468
E-mail: salesks@wcon.com