HSF

NOTES:
Current Rating: 3.0AMP
Contact Resistance: 20mΩ Max
Withstand Voltage: 1000V AC/DC
Insulation Resistance: 1000MΩ Min
Operation Temperature: −40℃ to +105℃

Contact Material:Brass
Contact plating:Au Or Sn over Ni
Latch Material:Zinc Alloy
Latch plating: Ni
Insulator Material:PBT or PA9T+33%G.F UL94V-0
Above 20 Poles With "E" Profile.

Recommended P.C.B Layout(Top Side)
(PCB BOARD TOLERANCE±0.05)

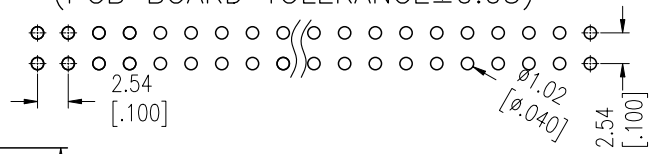

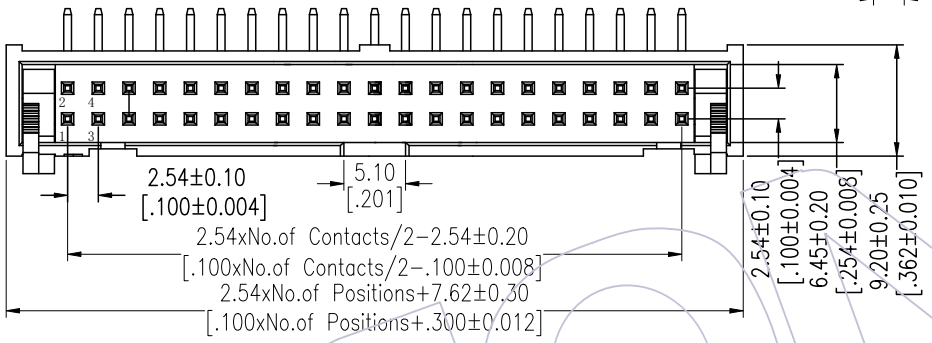

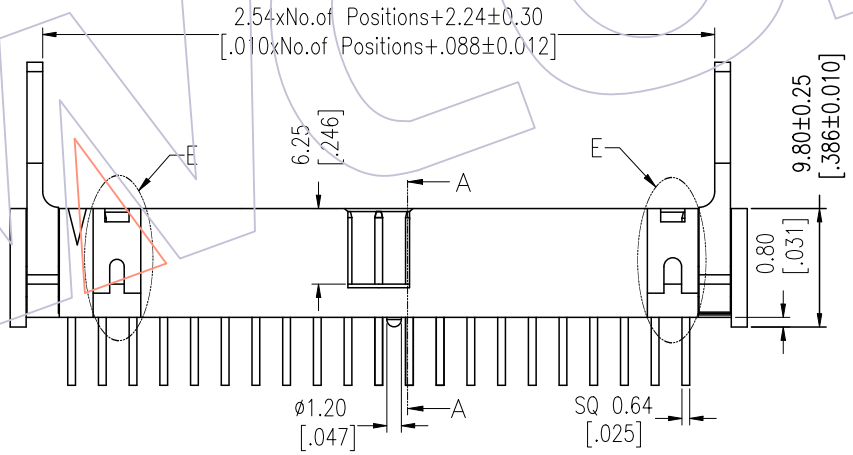

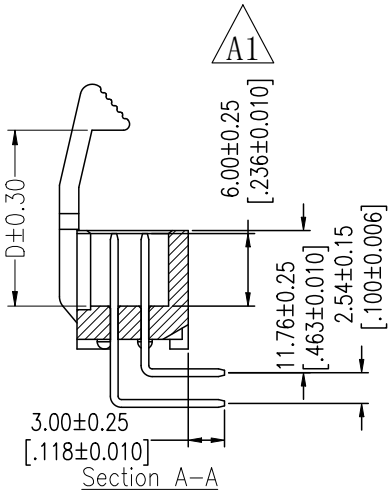

Ordering Information

3211 - XX R XX B X X 1

No.of Pins		Contact Plating	Insulator Color	Latch Type	Packing
06	30	G0=Gold Flash	B=Black	L=Long Latch	A=Tray
08	32	G3=10u"Gold	U=Blue	S=Short Latch	T=Tube
10	34	G4=15u"Gold	G=Grey(427C)		
14	40	G5=30u"Gold	E=Grey(413C)		
16	50	S0=Gold Flash/Tin			
20	60	S3=10u"Gold/Tin			
26	64	S4=15u"Gold/Tin			
		S5=30u"Gold/Tin			
		SN=Tin			

Item	Pitch	Mating
Standard	2.54	5211/5212
Alternate		

Dimension antitheses list

PART NO	D
3211-XXRXXBLX1	14.55
3211-XXRXXBSX1	10.65

REV	DATE	MODIFICATION DESCRIPTION	CHANGE
A1	2023/08/24	Add Size	Du Ying
A0	2012/10/08	NEW	JYHuang

OPERATION	
X.X	±0.40
X.XX	±0.25
X.XXX	±0.15
Angle	± 3°
DIM	TOL

DRAW	Du Ying	DATE	2023/08/24
CHECK		DATE	
APPROVE		DATE	

SCALE	FIT
UNIT	mm
SIZE	A4
SHEET	1/1
PROJ.	

PART NO. SEE TAB

TITLE: 2.54 EJECTOR HEADER 90° METAL LATCH H=9.8

Customer NO.

WCON
Http: www.wcon.com

WCON-Dongguan
Tel: +86 769 85358920
Fax: +86 769 85358915
E-mail: sales@wcon.com

WCON-Kunshan
Tel: +86 512 57468408
Fax: +86 512 57468468
E-mail: salesks@wcon.com