HSF

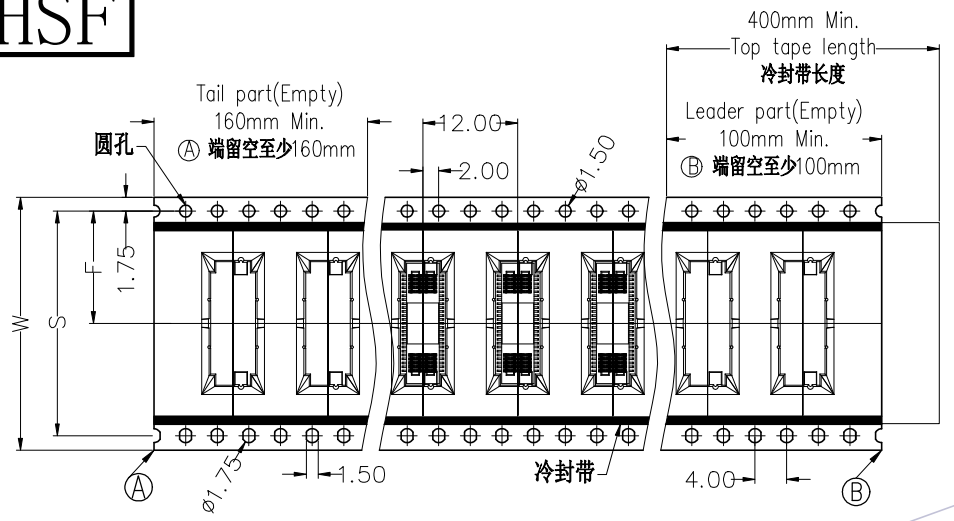

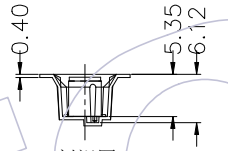

剖视图

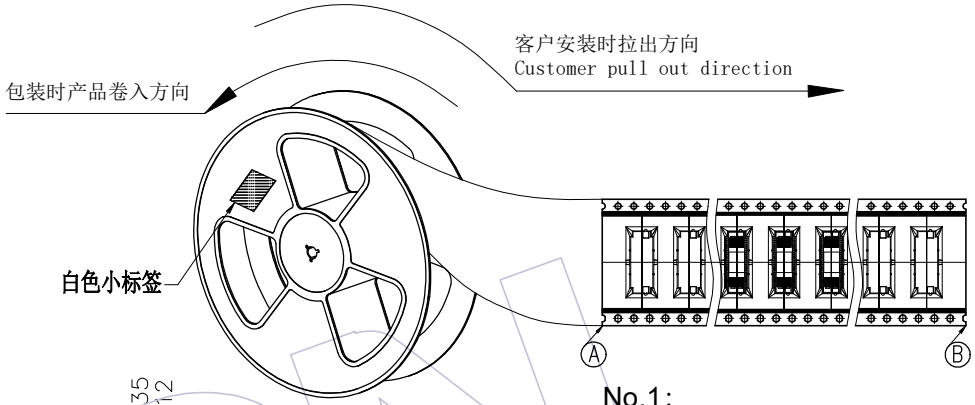

No.1:
产品包装前,注意载带要留空160mm以上
将产品放入载带凹槽后,用盖带封装,
注意:盖带与承载带的拉力30g-120g

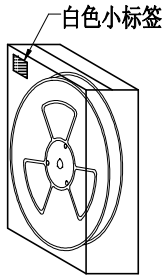

内箱：CTN-18E

No.2:
将卷盘套上PE-32防水袋,
放入1包干燥剂,
真空机封口后装入内箱,
用封箱胶封装好,并贴上标签。

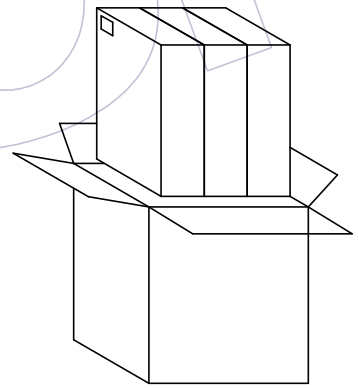

No.3:
将内箱装入外箱(3内箱/外箱)
注意统一标签方向

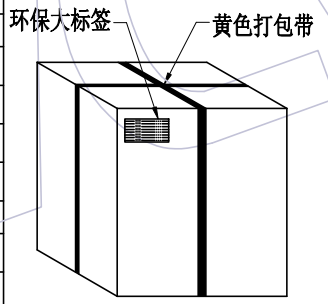

外箱：CTN-18K

No.4:
封箱,打包,贴标签。

Pin	载带料号	W	S	F	PCS/Reel	PCS/内箱	PCS/外箱
10P	TR3620-FN010M05501	16.0±0.30	/	7.50±0.15	900	3600	10800
12P	TR3620-FN012M05501	16.0±0.30	/	7.50±0.15	900	3600	10800
16P	TR3620-FN016M05501	24.0±0.30	/	11.50±0.15	900	2700	8100
20P	TR3620-FN020M05501	24.0±0.30	/	11.50±0.15	900	2700	8100
24P	TR3620-FN024M05501	24.0±0.30	/	11.50±0.15	900	2700	8100
26P	TR3620-FN026M05501	24.0±0.30	/	11.50±0.15	900	2700	8100
30P	TR3620-FN030M05501	24.0±0.30	/	11.50±0.15	900	2700	8100
34P	TR3620-FN034M05501	24.0±0.30	/	11.50±0.15	900	2700	8100
40P	TR3620-40G2403	24.0±0.30	/	11.50±0.15	900	2700	8100
50P	TR3620-FN050M05501	32.0±0.30	28.40±0.10	14.20±0.15	900	1800	5400
60P	TR3620-FN060M05501	32.0±0.30	28.40±0.10	14.20±0.15	900	1800	5400
70P	TR3620-FN070M05501	44.0±0.30	40.40±0.10	20.20±0.15	900	1800	5400
80P	TR3620-FN080M05501	44.0±0.30	40.40±0.10	20.20±0.15	900	1800	5400
90P	TR3620-FN090M05501	44.0±0.30	40.40±0.10	20.20±0.15	900	1800	5400
100P	TR3620-FN100M05501	44.0±0.30	40.40±0.10	20.20±0.15	900	1800	5400

变更记事	版次 REV	日期 DATE	变更说明 MODIFICATION DESCRIPTION	变更 CHANGE	核准 APPROVE
	A0	2021/07/22	NEW	------	------

工程图 ENGINEERING		绘图 DRAW	苏 珊	2021/07/22
X.X	±0.30	设计 DESIGN		
X.XX	±0.20	审核 CHECK		
X.XXX	±0.10	核准 APPROVE		
Angle	± 2°			
DIM	TOL			

SCALE	FIT
UNIT	mm
SIZE	A4
SHEET	1/1
PROJ.	

WCON

WCON ELECTRONICS (GUANGDONG) CO.,LTD

料号 PART NO.	3620-SXXX-045XXROX
品名 TITLE:	0.8 B TO B Socket Series SMT TYPE W/T CAP&POST,H2=4.50,Solder W=5.25 卷装规范